Weld End Fig. 70

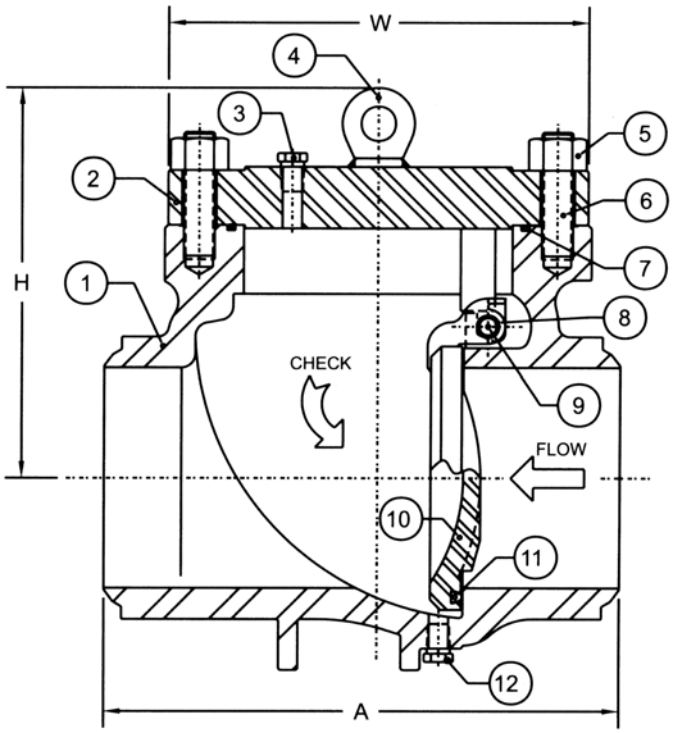

Weld End - Parts List

No.	Part	Material
1	Body (1)	ASTM A-216-WCB/WCC (1)
2	Cover	ASTM A-516 Gr. 70/ASTM A-105/ ASTM A-216-WCB
3	Vent plug	ASTM A-105
4	Lifting eye (2)	carbon steel
5	Cover nut	ASTM A-194-2H (2”-12”) (4)
6	Cover stud	ASTM A-193-B7 (2”-12”) (4)
7	Cover seal	Viton® (2”-12”) (4)
8	Clapper bushing	stainless steel
9	Clapper pin	stainless steel
10	Clapper	ASTM A-351/CF8M A-182-F316 (1”- 4”) ASTM A-105 (6” and larger)
11	Clapper seal	Viton® (2”-12”) (4)
12	Drain plug (3)	carbon steel

Notes:
(1) ASTM A-352-LCC for low temperature service; ASTM A-487-4C for high pressure valves.
(3) For valves 6” and larger.
(4) Optional drain plug is for valves 6” and larger.
(5) Consult factory for 14” and larger.

Viton is a registered trademark of DuPont Dow Elastomers

Stream-Flo Industries Ltd., 4505 - 74 Avenue, Edmonton, Alberta, Canada T6B 2H5, Ph (780) 468-6789, Fax (780) 469-7724

Weld End Fig. 70

Schedule of Dimensions

Valve Size in. (mm.)	ANSI Class	"A" in. (mm.)	"H" in. (mm.)	"W" in. (mm.)	Weight lbs. (kg.)
2 (50)	150	7.25 (184.2) *	5.31 (134.9)	6.50 (165.1)	25 (11)
	300	7.25 (184.2) *	5.31 (134.9)	6.50 (165.1)	25 (11)
	600	7.25 (184.2) *	5.51 (134.9)	6.50 (165.1)	25 (11)
	900	7.25 (184.2) *	5.56 (141.2)	8.50 (215.9)	25 (11)
3 (80)	150	8.75 (222.3) *	6.50 (165.1)	8.25 (209.6)	54 (24)
	300	8.75 (222.3) *	6.50 (165.1)	8.25 (209.6)	54 (24)
	600	8.75 (222.3) *	6.50 (165.1)	8.25 (209.6)	54 (24)
	900	8.75 (222.3) *	6.50 (165.1)	8.25 (209.6)	54 (24)
4 (100)	150	10.75 (273.1) *	8.25 (209.6)	10.13 (257.3)	79 (36)
	300	10.75 (273.1) *	8.25 (209.6)	10.13 (257.3)	79 (36)
	600	10.75 (273.1) *	8.25 (209.6)	10.13 (257.3)	79 (36)
	900	10.75 (273.1) *	8.25 (209.6)	10.13 (257.3)	79 (36)
6 (150)	150	18.50 (469.9) *	11.94 (303.3)	12.88 (327.2)	185 (84)
	300	18.50 (469.9) *	11.94 (303.3)	12.88 (327.2)	185 (84)
	600	18.50 (469.9) *	11.94 (303.3)	12.88 (327.2)	185 (84)
	900	19.25 (488.9) *	12.50 (317.5)	13.38 (339.9)	235 (107)
	1500	20.75 (527.1) *	14.31 (363.5)	14.63 (371.6)	310 (141)
8 (200)	150	24.00 (609.6) *	15.25 (387.4)	16.00 (406.4)	425 (193)
	300	24.00 (609.6) *	15.25 (387.4)	16.00 (406.4)	425 (193)
	600	24.00 (609.6) *	15.25 (387.4)	16.00 (406.4)	425 (193)
	900	24.00 (609.6) *	15.75 (400.1)	16.25 (412.8)	450 (204)
10 (250)	150	26.00 (660.4) *	17.13 (435.1)	18.13 (508.0)	600 (272)
	300	26.00 (660.4) *	17.13 (435.1)	18.13 (508.0)	600 (272)
	600	26.00 (660.4) *	17.13 (435.1)	18.13 (508.0)	600 (272)
	900	27.00 (685.8) *	17.88 (454.2)	19.38 (492.3)	725 (329)
12 (300)	150	29.00 (736.6) *	20.13 (511.3)	21.25 (539.8)	860 (390)
	300	29.00 (736.6) *	20.13 (511.3)	21.25 (539.8)	860 (390)
	600	29.00 (736.6) *	20.13 (511.3)	21.25 (539.8)	860 (390)
	900	29.00 (736.6) *	20.75 (527.1)	22.00 (558.8)	940 (426)
14 (350)	150	35.00 (889.0) *	22.38 (568.5)	26.25 (666.8)	1640 (744)
	300	35.00 (889.0) *	22.38 (568.5)	26.25 (666.8)	1640 (744)
	600	35.00 (889.0)	22.38 (568.5)	26.25 (666.8)	1640 (744)
	900	40.50 (1028.7)	23.94 (608.1)	28.63 (727.2)	1825 (827)
	1500	49.50 (1257.3)	26.94 (684.3)	31.88 (809.8)	2675 (1213)

Weight and dimensional information is for reference only and subject to chan
** Indicates dimensions not in accorda*

Weld End Fig. 70

Schedule of Dimensions

Valve Size in. (mm.)	ANSI Class	"A" in. (mm.)	"H" in. (mm.)	"W" in. (mm.)	Weight lbs. (kg.)
16 (400)	150	34.50 (876.3) *	24.25 (615.9)	29.50 (749.3)	1640 (743)
	300	34.50 (876.3) *	24.25 (615.9)	29.50 (749.3)	1640 (743)
	600	34.50 (876.3) *	24.25 (615.9)	29.50 (749.3)	1640 (743)
	900	37.50 (952.5) *	25.75 (654.1)	31.75 (806.5)	1935 (877)
18 (450)	150	34.25 (870.0) *	24.88 (631.9)	26.00 (660.4)	2000 (907)
	300	34.25 (870.0) *	24.88 (631.9)	26.00 (660.4)	2000 (907)
	600	34.25 (870.0) *	24.88 (631.9)	26.00 (660.4)	2000 (907)
20 (500)	150	34.75 (882.7) *	28.13 (714.5)	30.63 (778.0)	3470 (1573)
	300	34.75 (882.7) *	28.13 (714.5)	30.63 (778.0)	3470 (1573)
	600	34.75 (882.7) *	28.13 (714.5)	30.63 (778.0)	3470 (1573)
	900	52.00 (1320.8)	32.50 (825.5)	38.25 (971.6)	4135 (1874)
24 (600)	150	43.00 (1092.2) *	33.63 (854.2)	35.50 (907.7)	5190 (2353)
	300	43.00 (1092.2) *	33.63 (854.2)	35.50 (907.7)	5190 (2353)
	600	43.00 (1092.2) *	33.63 (854.2)	35.50 (907.7)	5190 (2353)
	900	61.00 (1549.4)	37.31 (947.7)	41.25 (1047.8)	6500 (2947)
26 (650)	150	57.00 (1447.8) *	38.13 (968.5)	43.25 (1098.6)	consult factory
	300	57.00 (1447.8) *	38.13 (968.5)	43.25 (1098.6)	
	600	57.00 (1447.8)	38.13 (968.5)	43.25 (1098.6)	
30 (750)	150	57.00 (1447.8) *	39.50 (1003.3)	45.00 (1143.0)	consult factory
	300	57.00 (1447.8) *	39.50 (1003.3)	45.00 (1143.0)	
	600	57.00 (1447.8) *	41.38 (1051.1)	45.00 (1143.0)	10460 (4742)
	900	68.00 (1727.2) *	43.88 (1114.6)	49.50 (1257.3)	15250 (6913)
36 (900)	150	70.00 (1778.0) *	46.44 (1179.6)	55.50 (1409.7)	consult factory
	300	70.00 (1778.0) *	46.44 (1179.6)	55.50 (1409.7)	
	600	70.00 (1778.0) *	48.63 (1235.2)	55.50 (1409.7)	16200 (7344)
	900	86.25 (2190.8) *	52.81 (1341.4)	63.38 (1609.8)	consult factory
42 (1050)	150	88.00 (2235.2) *	58.13 (1476.5)	66.13 (1679.7)	consult factory
	300	88.00 (2235.2) *	58.13 (1476.5)	66.13 (1679.7)	
	600	88.00 (2235.2) *	58.13 (1476.5)	66.13 (1679.7)	28681 (13001)
48 (1200)	150	106.00 (2692.4) *	62.75 (1593.9)	70.00 (1778.0)	consult factory
	300	106.00 (2692.4) *	62.75 (1593.9)	70.00 (1778.0)	
	600	106.00 (2692.4) *	62.75 (1593.9)	70.00 (1778.0)	

ge without notice. Weights and dimensions can be confirmed at time of order.
ance with ANSI B16.10 and/or API 6D.

Head Office
and Manufacturing Facility
4505 - 74 Avenue
Edmonton Alberta Canada
T6B 2H5
Tel 780.468.6789
Fax 780.469.7724

Sales Office
400 Bow Valley Square One
202 - 6 Avenue SW
Calgary Alberta Canada
T2P 2R9
Tel 403.269.5531
Fax 403.266.3307

Stream-Flo USA Inc.
Valve Business Unit
12777 Jones Road Suite 332
Houston Texas USA 77070
Tel 832.912.1022
Fax 932.912.1151

International Sales
Indonesia
62.21.7918.1234
United Arab Emirates
971.2.676.0130
Algeria
213.29.738.910
United Kingdom
353.87.798.3582

www.streamflo.com
info@streamflo.com